TDA2040

20W Hi-Fi AUDIO POWER AMPLIFIER

DESCRIPTION

The TDA2040 is a monolithic integrated circuit in Pentawatt ® package, intended for use as an audio class AB amplifier. Typically it provides 22W output power (d = 0.5%) at V_S = 32V/4Ω . The TDA2040 provides high output current and has very low harmonic and cross-over distortion. Further the device incorporates a patented short circuit protection system comprising an arrangement for automatically limiting the dissipated power so as to keep the working point of the output transistors within their safe operating area. A thermal shut-down system is also included.

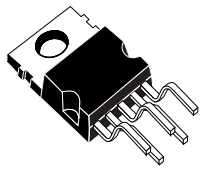

PENTAWATT

ORDERING NUMBER : TDA2040V

TEST CIRCUIT

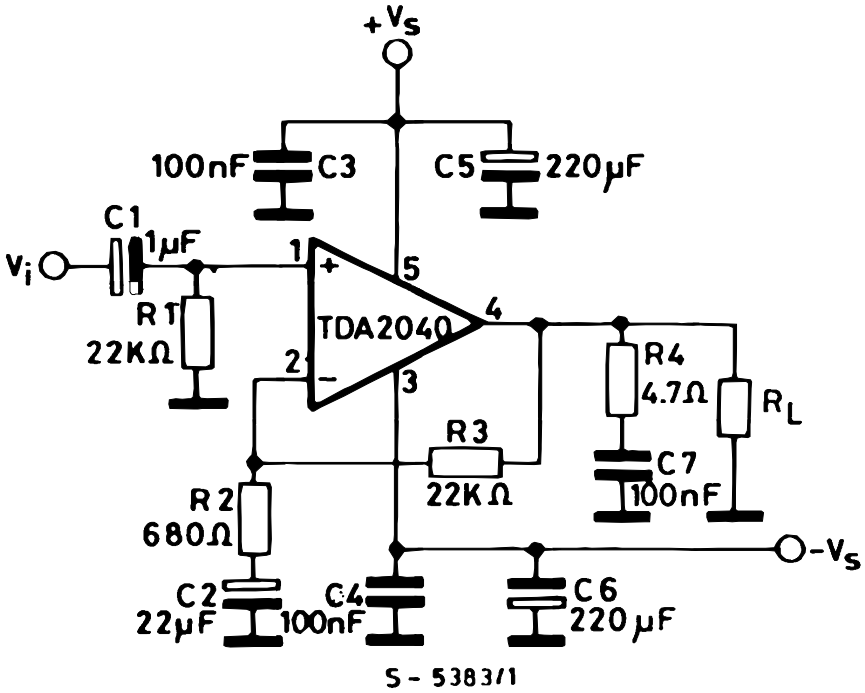

SCHEMATIC DIAGRAM

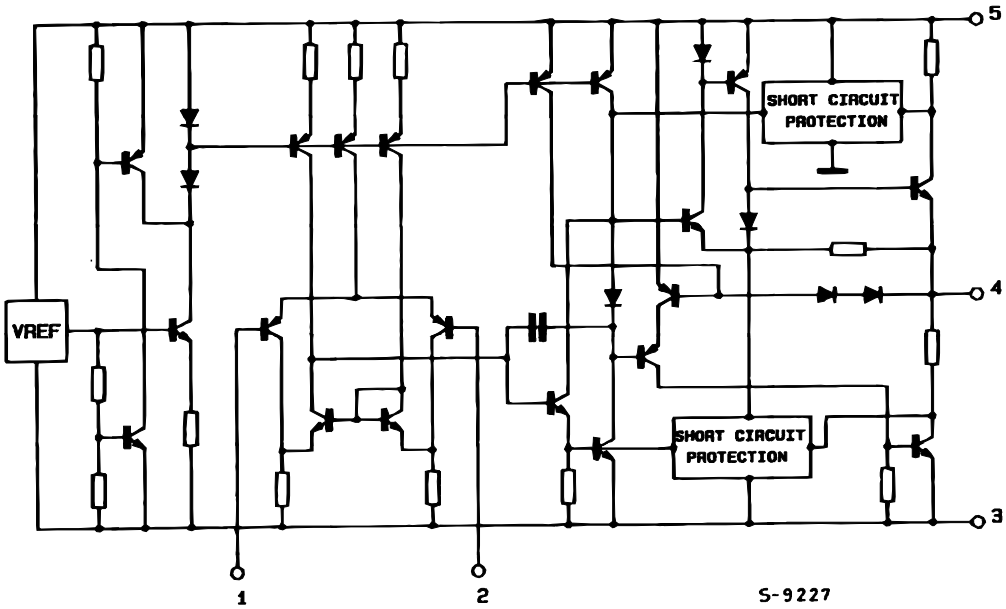

PIN CONNECTION

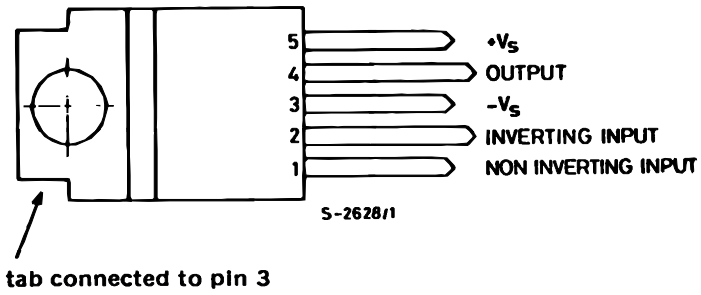

THERMAL DATA

Symbol	Parameter		Value	Unit
$R_{th\ j\text{-}case}$	Thermal Resistance Junction-case	Max.	3	°C/W

ABSOLUTE MAXIMUM RATINGS

Symbol	Parameter	Value	Unit
V_s	Supply Voltage	± 20	V
V_i	Input Voltage	V_s	
V_i	Differential Input Voltage	± 15	V
I_o	Output Peak Current (internally limited)	4	A
P_{tot}	Power Dissipation at T_{case} = 75 °C	25	W
T_{stg}, T_j	Storage and Junction Temperature	– 40 to + 150	°C

ELECTRICALCHARACTERISTICS

(refer to the test circuit, V_S = ± 16V, T_{amb} = 25°C unless otherwise specified)

Symbol	Parameter	Test Conditions	Min.	Typ.	Max.	Unit
V_s	Supply Voltage		± 2.5		± 20	V
I_d	Quiescent Drain Current	V_s = ± 4.5V V_s = ± 20V		 45	30 100	mA mA
I_b	Input Bias Current	V_s = ± 20V		0.3	1	µA
V_{os}	Input Offset Voltage	V_s = ± 20V		± 2	± 20	mV
I_{os}	Input Offset Current				± 200	nA
P_o	Output Power	d = 0.5%, T_{case} = 60°C f = 1kHz R_L = 4Ω R_L = 8Ω f = 15kHz R_L = 4Ω	 20 15	 22 12 18		W
BW	Power Bandwidth	P_o = 1W, R_L = 4Ω		100		kHz
G_v	Open Loop Voltage Gain	f = 1kHz		80		dB
G_v	Closed Loop Voltage Gain	f = 1kHz	29.5	30	30.5	dB
d	Total Harmonic Distortion	P_o = 0.1 to 10W, R_L = 4Ω f = 40 to 15000Hz f = 1kHz		 0.08 0.03		%
e_N	Input Noise Voltage	B = Curve A B = 22Hz to 22kHz		2 3	 10	µV µV
i_N	Input Noise Current	B = Curve A B = 22Hz to 22kHz		50 80	 200	pA
R_i	Input Resistance (pin 1)		0.5	5		MΩ
SVR	Supply Voltage Rejection	R_L = 4Ω, R_g = 22kΩ, G_v = 30dB f = 100Hz, V_{ripple} = 0.5V_{RMS}	40	50		dB
η	Efficiency	f = 1kHz P_o = 12W R_L = 8 Ω P_o = 22W R_L = 4 Ω		 66 63		%
T_j	Thermal Shut-down Junction Temperature			145		°C

Figure 1 : Output Power versus Supply Voltage

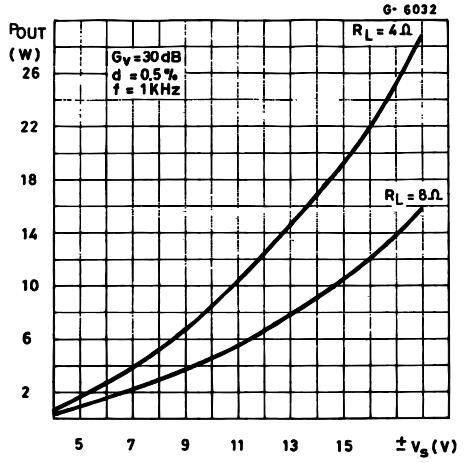

Figure 2 : Output Power versus Supply Voltage

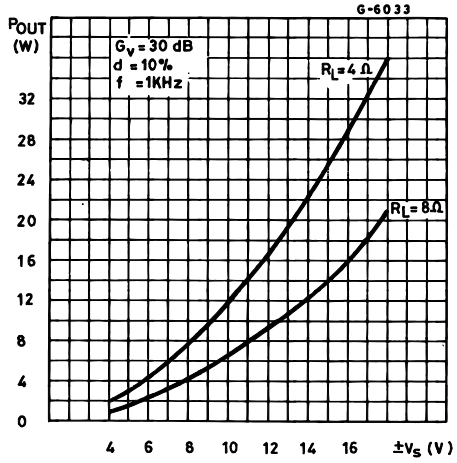

Figure 3 : Output Power versus Supply Voltage

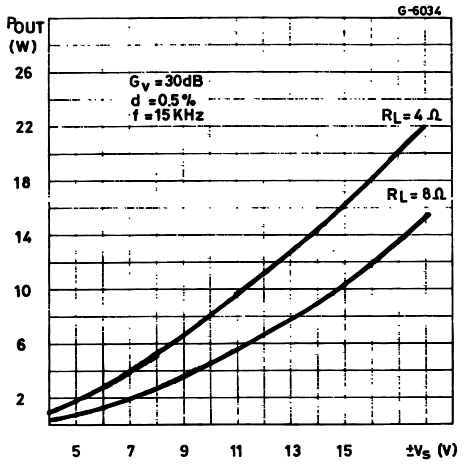

Figure 4 : Distortion versus Frequency

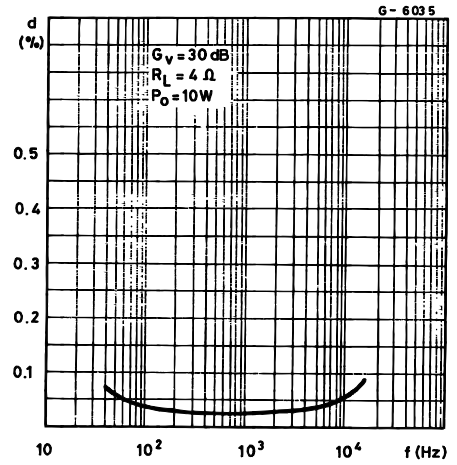

Figure 5 : Supply Voltage Rejection versus Frequency

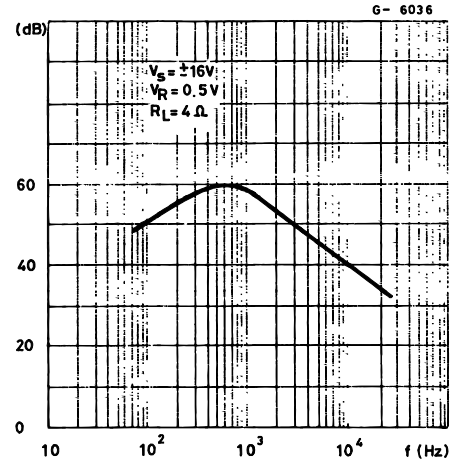

Figure 6 : Supply Voltage Rejection versus Voltage Gain

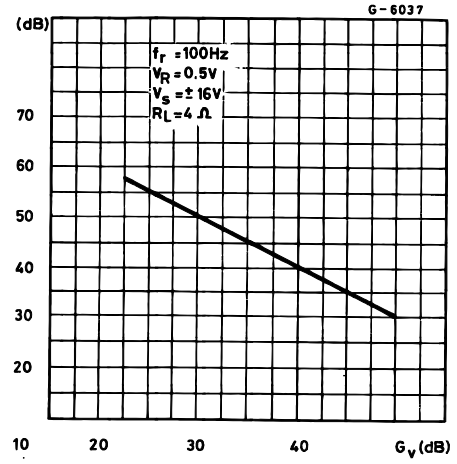

Figure 7 : Quiescent Drain Current versus Supply Voltage

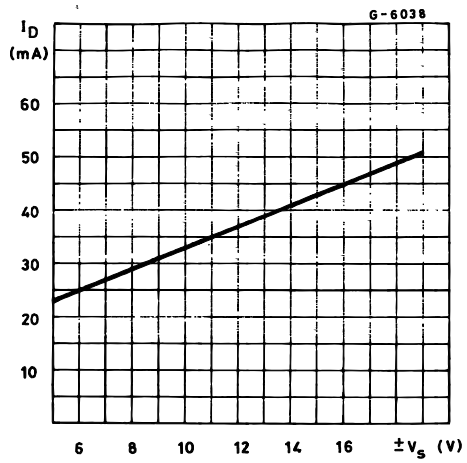

Figure 8 : Open Loop Gain versus Frequency

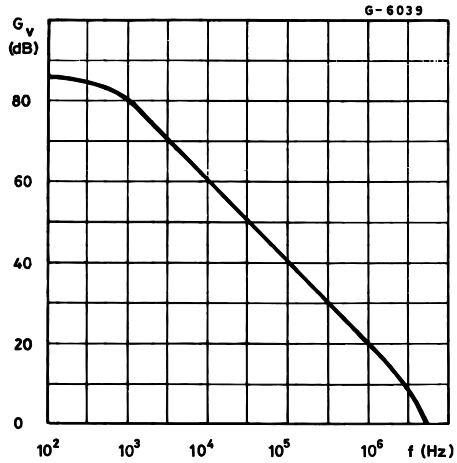

Figure 9 : Power Dissipation versus Output Power

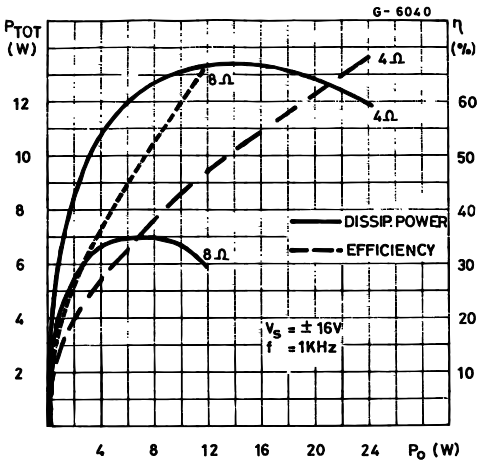

Figure 10 : Amplifier with Split Power Supply

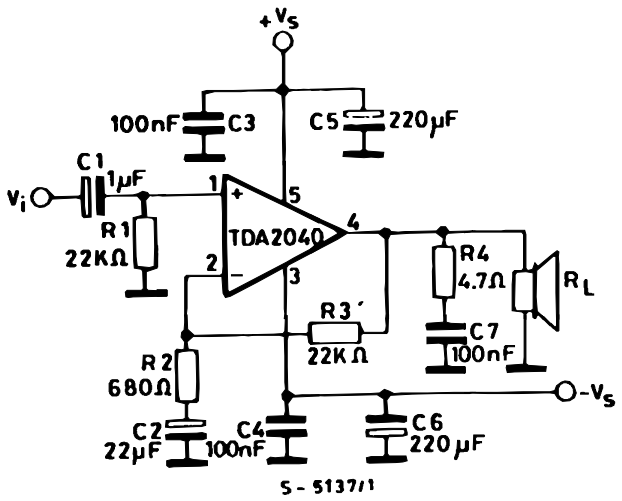

Figure 11 : P.C. Board and Components Layout for the Circuit of Figure 10 (1:1 scale)

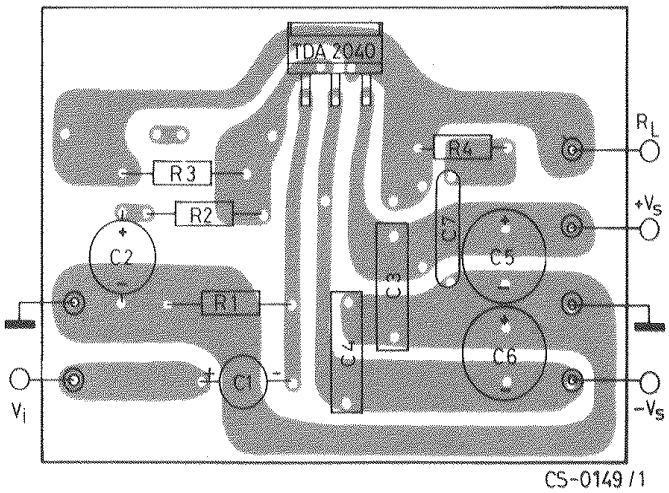

Figure 12 : Amplifier with Split Power Supply (see Note)

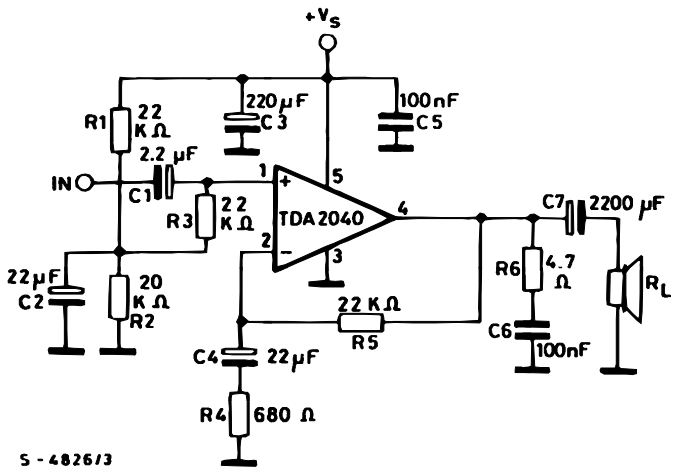

Note : In this case of highly inductive loads protection diodes may be necessary.

Figure 13 : P.C. Board and Components Layout for the Circuit of Figure 12 (1:1 scale)

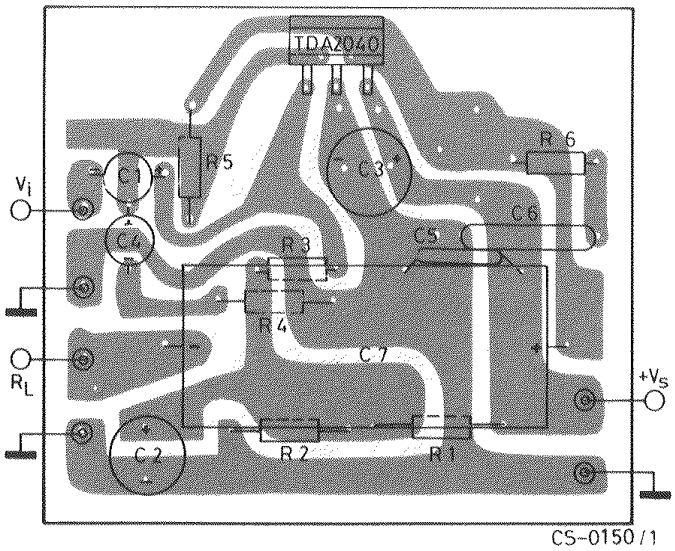

Figure 14 : 30W Bridge Amplifier with Split Power Supply

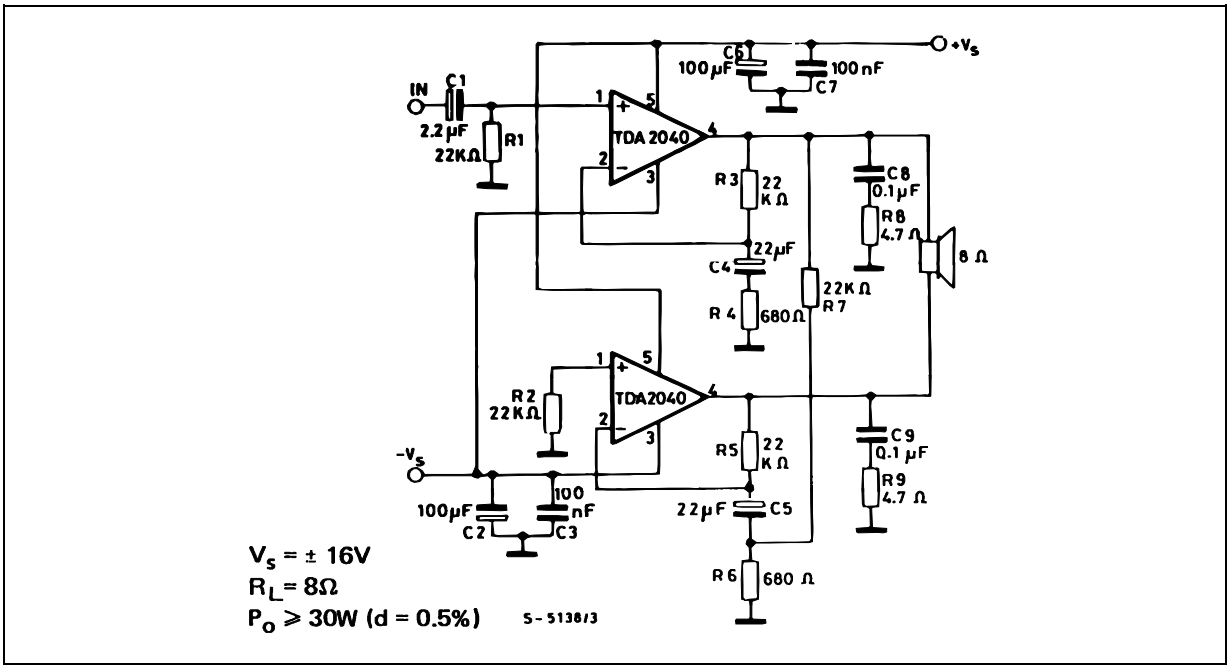

Figure 15 : P.C. Board and Components Layout for the Circuit of Figure 14 (1:1 scale)

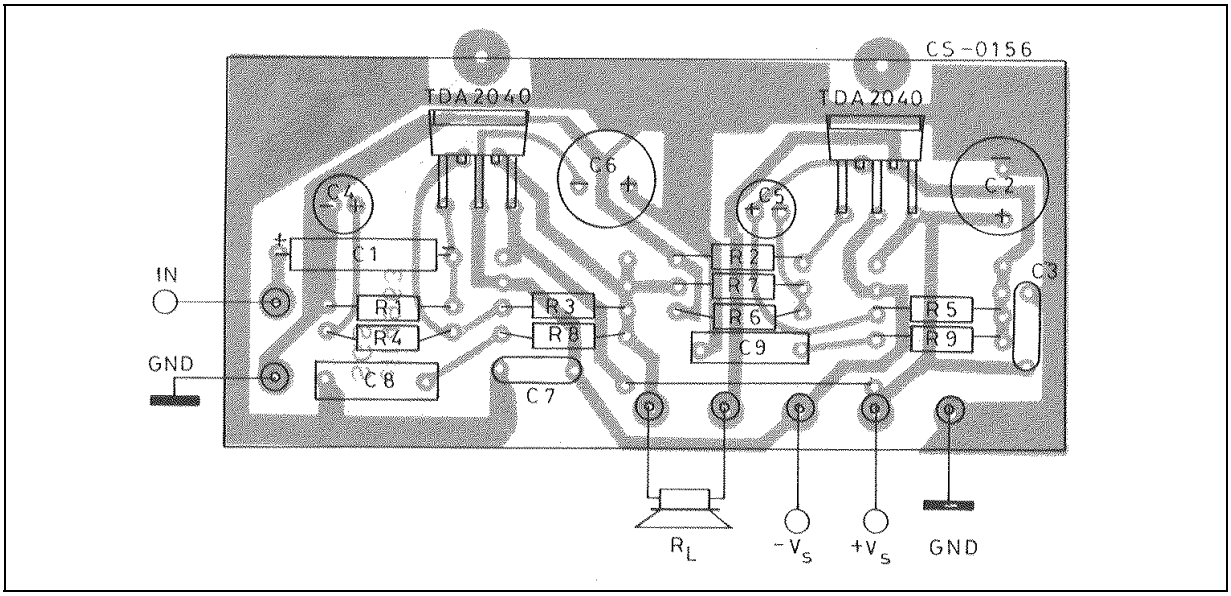

Figure 16 : Two Way Hi-Fi System with Active Crossover

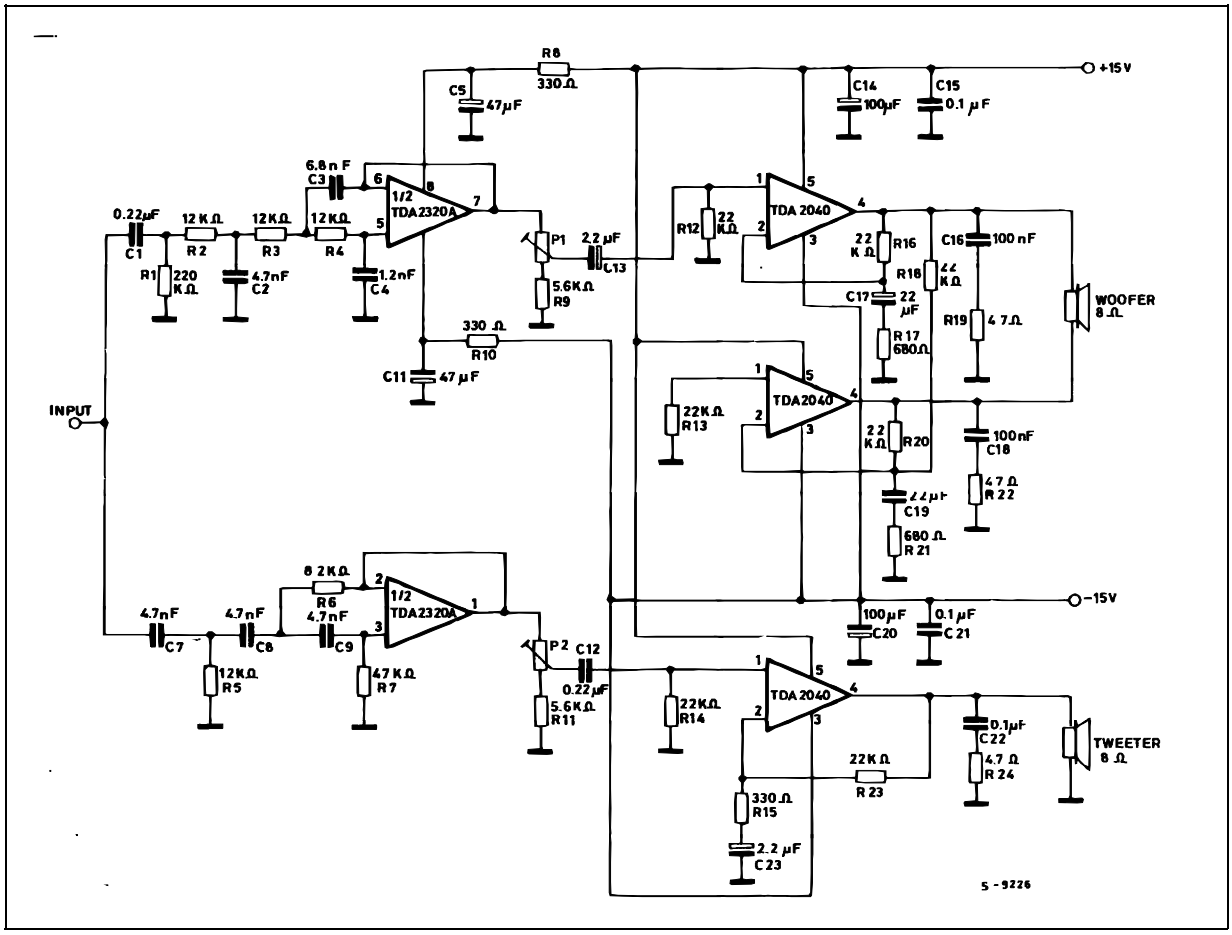

Figure 17 : P.C. Board and Components Layout for the Circuit of Figure 16 (1:1 scale)

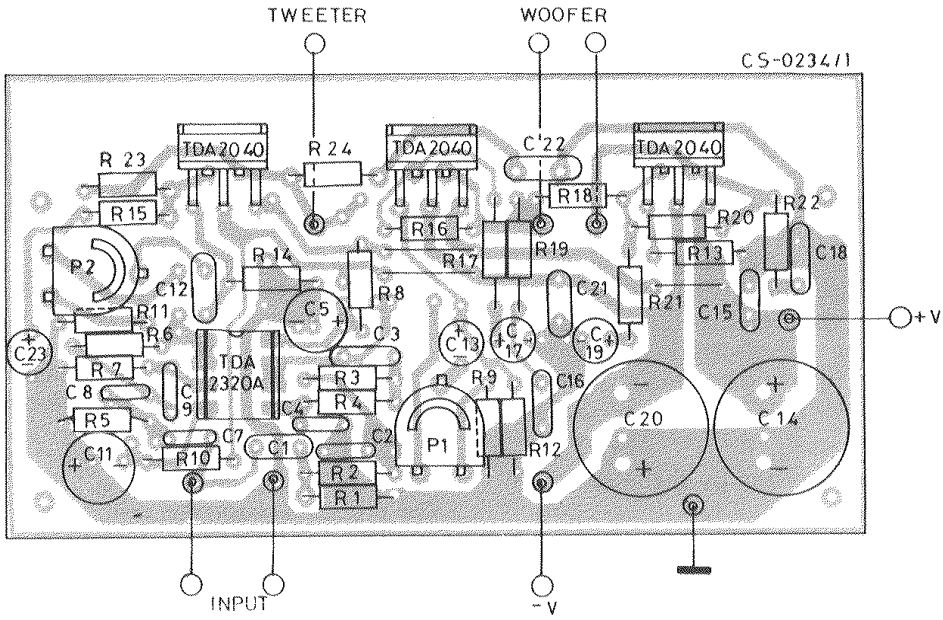

Figure 18 : Frequency Response

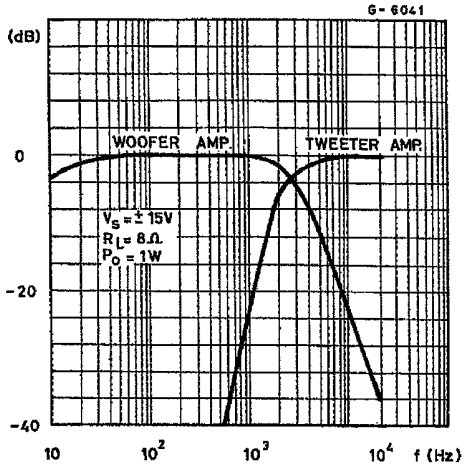

Figure 19 : Power Distribution versus Frequency

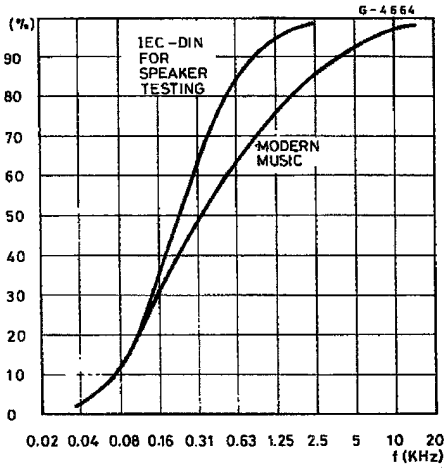

MULTIWAY SPEAKER SYSTEMS AND ACTIVE BOXES

Multiway loudspeaker systems provide the best possible acoustic performance since each loudspeaker is specially designed and optimized to handle a limited range of frequencies. Commonly, these loudspeaker systems divide the audio spectrum into two, three or four bands.

To maintain a flat frequency response over the Hi-Fi audio range the bands covered by each loudspeaker must overlap slightly. Imbalance between the loudspeakers produces unacceptable results therefore it is important to ensure that each unit generates the correct amount of acoustic energy for its segment of the audio spectrum. In this respect it is also important to know the energy distribution of the music spectrum determine the cutoff frequencies of the crossover filters (see Figure 19). As an example, a 100W three-way system with crossover frequencies of 400Hz and 3kHz would require 50W for the woofer, 35W for the midrange unit and 15W for the tweeter.

Both active and passive filters can be used for crossovers but today active filters cost significantly less than a good passive filter using air-cored inductors and non-electrolytic capacitors. In addition, active filters do not suffer from the typical defects of passive filters :

- power loss
- increased impedance seen by the loudspeaker (lower damping)
- difficulty of precise design due to variable loudspeaker impedance

Obviously, active crossovers can only be used if a power amplifier is provided for each drive unit. This makes it particularly interesting and economically sound to use monolithic power amplifiers. In some applications, complex filters are not really necessary and simple RC low-pass and high-pass networks (6dB/octave) can be recommended.

The results obtained are excellent because this is the best type of audio filter and the only one free from phase and transient distortion.

The rather poor out of band attenuation of single RC filters means that the loudspeaker must operate linearly well beyond the crossover frequency to avoid distortion.

A more effective solution, named "Active Power Filter" by SGS is shown in Figure 20.

Figure 20 : Active Power Filter

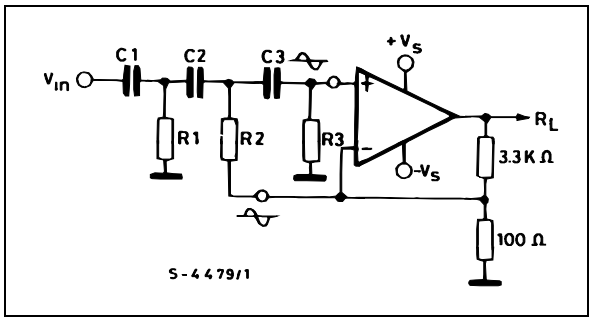

The proposed circuit can realize combined power amplifiers and 12dB/octave or 18dB/octave high-pass or low-pass filters.

In practice, at the input pins of the amplifier two equal and in-phase voltages are available, as required for the active filter operation.

The impedance at the pin (-) is of the order of 100Ω, while that of the pin (+) is very high, which is also what was wanted.

C1 = C2 = C3	R1	R2	R3
22 nF	8.2 kΩ	5.6 kΩ	33 kΩ

The component values calculated for f_c = 900Hz using a Bessel 3rd order Sallen and Key structure are :

In the block diagram of Figure 21 is represented an active loudspeaker system completely realized using power integrated circuit, rather than the traditional discrete transistors on hybrids, very high quality is obtained by driving the audio spectrum into three bands using active crossovers (TDA2320A) and a separate amplifier and loudspeakers for each band.

A modern subwoofer/midrange/tweeter solution is used.

PRATICAL CONSIDERATION

Printed Circuit Board

The layout shown in Figure 11 should be adopted by the designers. If different layouts are used, the ground points of input 1 and input 2 must be well decoupled from the gorund return of the output in which a high current flows.

Assembly Suggestion

No electrical isolation is needed between the package and the heatsink with single supply voltage configuration.

Application Suggestions

The recommended values of the components are those shown on application circuit of Fig. 10. Different values can be used. The following table can help the designer.

Figure 21 : High Power Active Loudspeaker System using TDA2030A and TDA2040

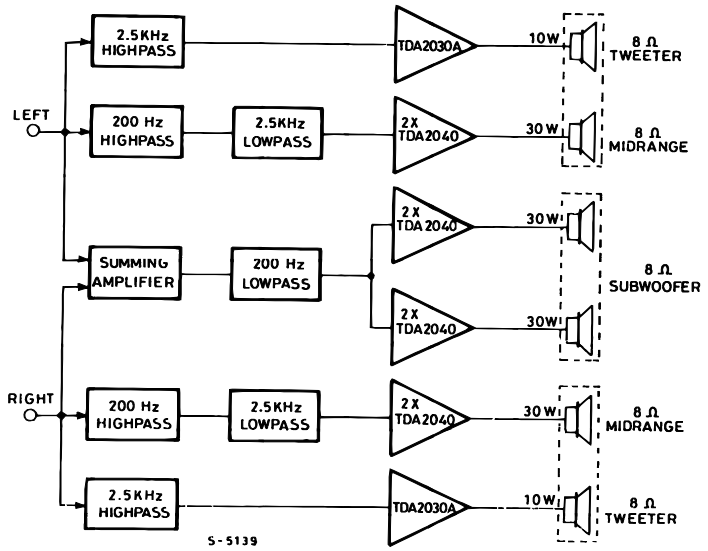

Comp.	Recom. Value	Purpose	Larger than Recommended Value	Smaller than Recommended Value
R1	22kΩ	Non inverting input biasing	Increase of input impedance	Decrease of input impedance
R2	680Ω	Closed loop gain setting	Decrease of gain (*)	Increase of gain
R3	22kΩ	Closed loop gain setting	Increase of gain	Decrease of gain (*)
R4	4.7Ω	Frequency stability	Danger of oscillation at high frequencies with inductive loads	
C1	1µF	Input DC decoupling		Increase of low frequencies cut-off
C2	22µF	Inverting DC decoupling		Increase of low frequencies cut-off
C3, C4	0.1µF	Supply voltage bypass		Danger of oscillation
C5, C6	220µF	Supply voltage bypass		Danger of oscillation
C7	0.1µF	Frequency stability		Danger of oscillation

(*) The value of closed loop gain must be higher than 24dB

DIM.	mm			inch		
	MIN.	TYP.	MAX.	MIN.	TYP.	MAX.
A			4.8			0.189
C			1.37			0.054
D	2.4		2.8	0.094		0.110
D1	1.2		1.35	0.047		0.053
E	0.35		0.55	0.014		0.022
E1	0.76		1.19	0.030		0.047
F	0.8		1.05	0.031		0.041
F1	1.0		1.4	0.039		0.055
G	3.2	3.4	3.6	0.126	0.134	0.142
G1	6.6	6.8	7.0	0.260	0.268	0.276
H2			10.4			0.409
H3	10.05		10.4	0.396		0.409
L	17.55	17.85	18.15	0.691	0.703	0.715
L1	15.55	15.75	15.95	0.612	0.620	0.628
L2	21.2	21.4	21.6	0.831	0.843	0.850
L3	22.3	22.5	22.7	0.878	0.886	0.894
L4			1.29			0.051
L5	2.6		3.0	0.102		0.118
L6	15.1		15.8	0.594		0.622
L7	6.0		6.6	0.236		0.260
L9	2.1		2.7	0.008		0.106
L10	4.3		4.8	0.17		0.189
M	4.23	4.5	4.75	0.167	0.178	0.187
M1	3.75	4.0	4.25	0.148	0.157	0.167
V4	40° (typ.)					
V5	90° (typ.)					
Dia	3.65		3.85	0.144		0.152

OUTLINE AND MECHANICAL DATA

Weight: 2.00gr

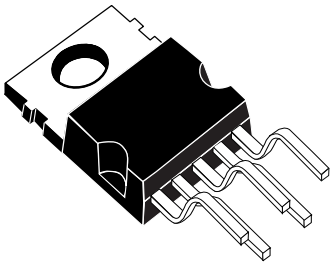

Pentawatt V

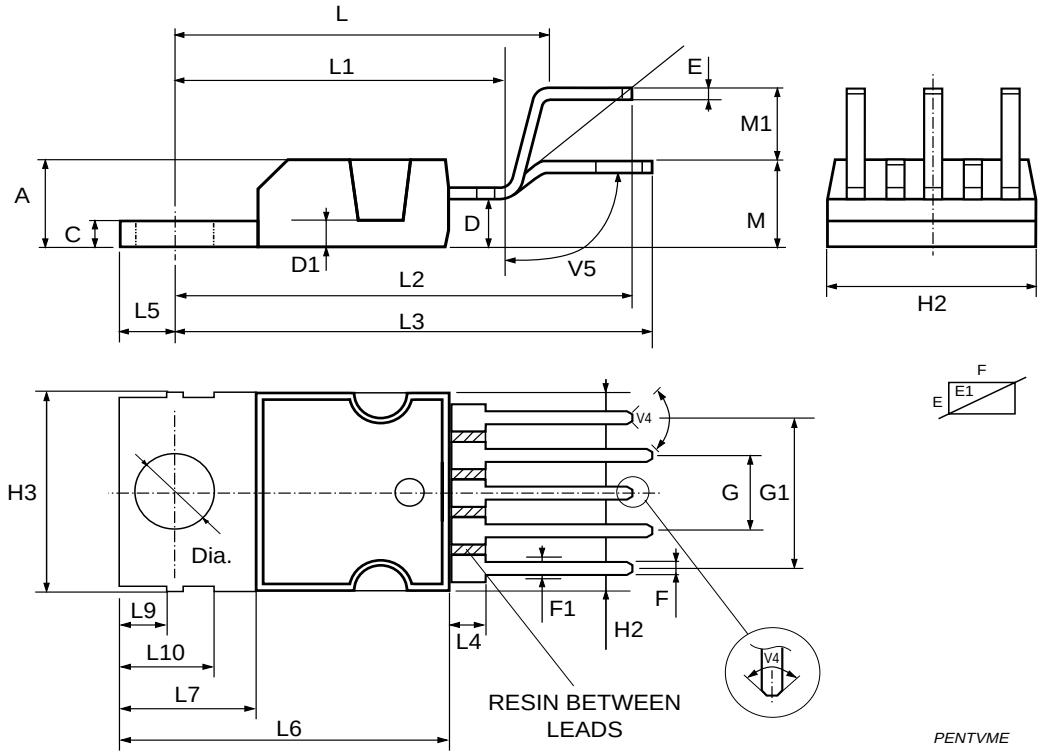

0015981

Information furnished is believed to be accurate and reliable. However, STMicroelectronics assumes no responsibility for the consequences of use of such information nor for any infringement of patents or other rights of third parties which may result from its use. No license is granted by implication or otherwise under any patent or patent rights of STMicroelectronics. Specifications mentioned in this publication are subject to change without notice. This publication supersedes and replaces all information previously supplied. STMicroelectronics products are not authorized for use as critical components in life support devices or systems without express written approval of STMicroelectronics.

The ST logo is a registered trademark of STMicroelectronics.
All other names are the property of their respective owners

© 2003 STMicroelectronics - All rights reserved

STMicroelectronics GROUP OF COMPANIES
Australia – Belgium - Brazil - Canada - China – Czech Republic - Finland - France - Germany - Hong Kong - India - Israel - Italy - Japan - Malaysia - Malta - Morocco - Singapore - Spain - Sweden - Switzerland - United Kingdom - United States
www.st.com